YSD-OD5500ZFSV-FC-N

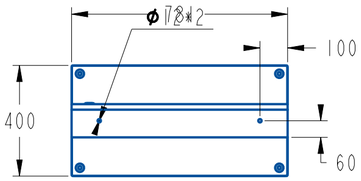

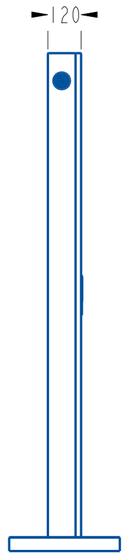

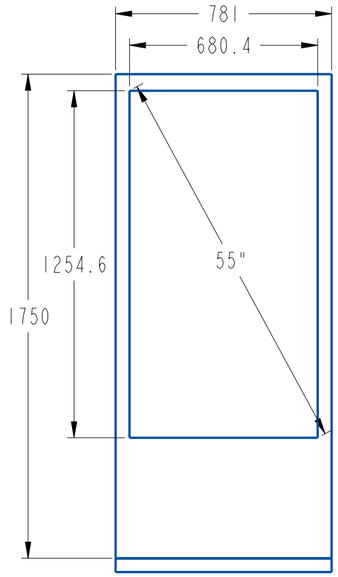

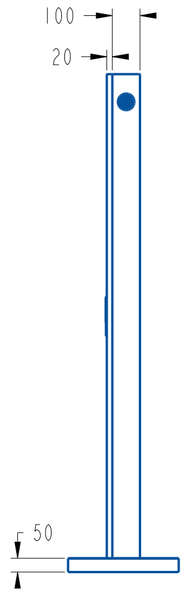

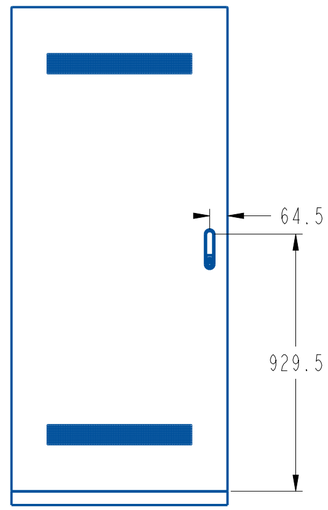

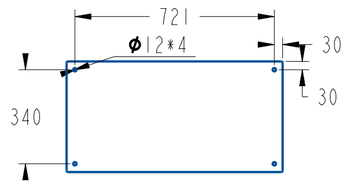

						Plating				
						55 inch screen		Yamato Signage Inc.		
Mark	Number	partition	Change No	Signature	Date					
Design				03-02-21		Product code		Unit	Proportion	Projection identification	Edition
Audit						*		mm	3:50		A0
Craftsmanship								Qty		1 st	total 1
Standardization								YSD-OD5500ZFSV-FC-N			
Approve											